Model: HD2B

Custom & Precision Drawer Slides
2074 Aerotech Dr.
Colorado Springs, CO 80916
(719)-390-6585

SLIM TRACK 2-SECTION BALL BEARING STEEL CHASSIS SLIDES

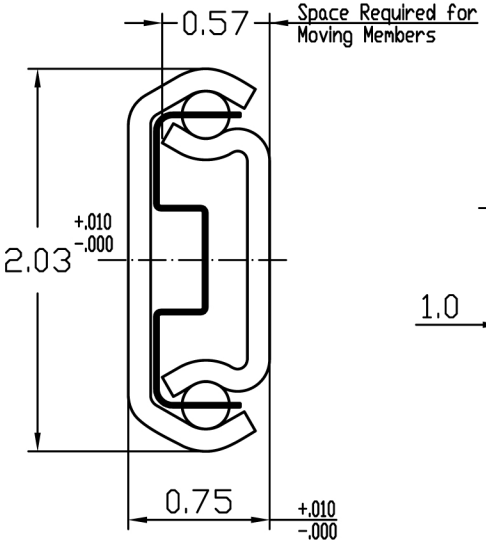

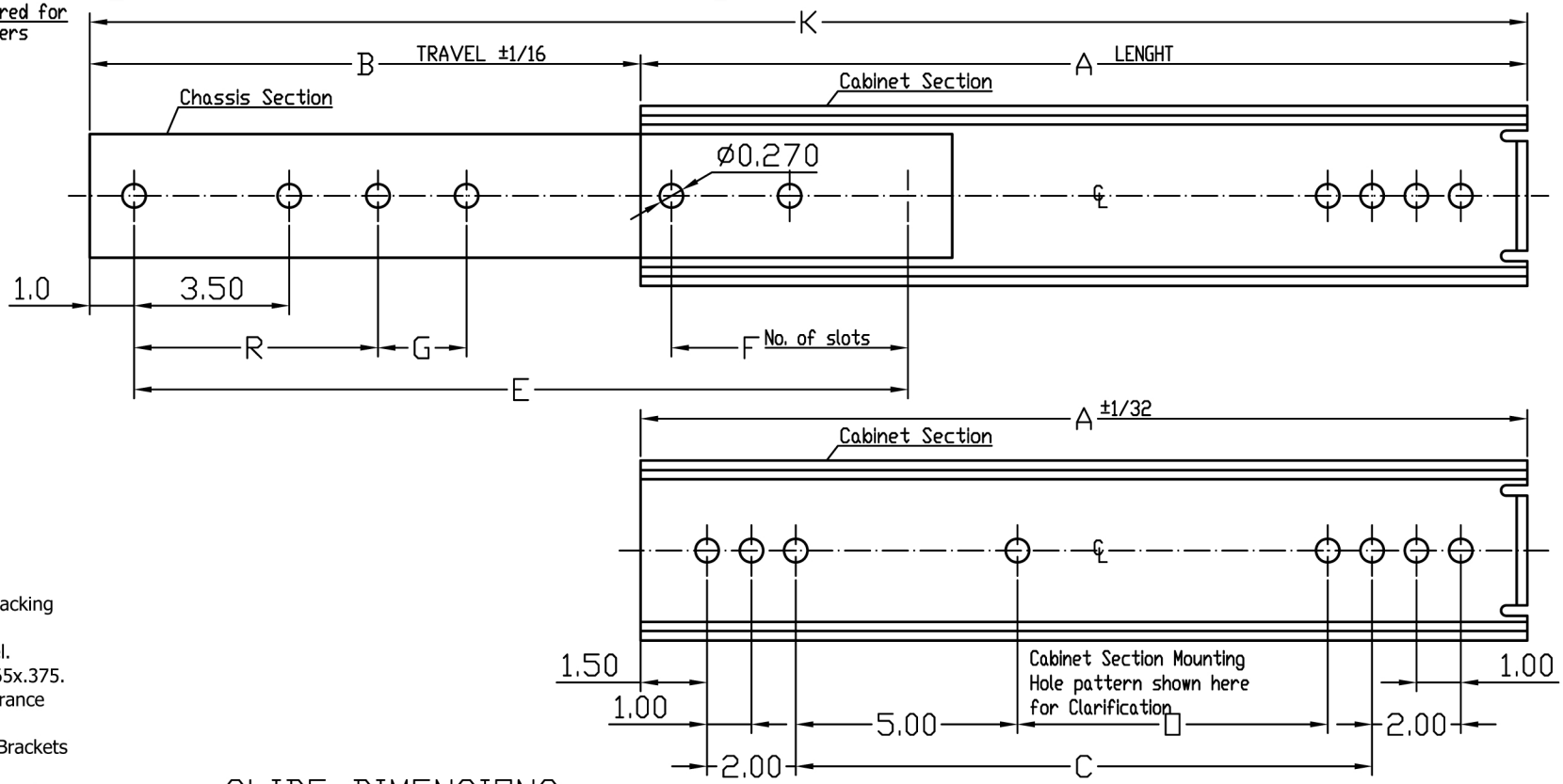

NOTES:

1. LOAD CAPACITY:* to 400 lbs.
   Any Load Requirements available by stacking Vertically and/or Horizontally.
2. MATERIAL: Prime work hardened Steel.
3. HOLES: All holes .265 Dia. All slots .265x.375. Mounting Hole and Slot Location Tolerrance ±.005
4. BRACKETS: Front and Rear Mounting Brackets are available.
5. FINISH: Bright Electro - Zinc Plated per QQZ - 325, Type I, - Silver Color.

* Load Ratings are based on a pair of 18" Slides with Standard Extension

Any choice of combinations of lengths, engagements, mounting - hole patterns, etc., available as a STSC LLC service at a nominal cost, or, in many cases at no additional cost. Additional holes available at STSC LLC options.

SLIDE DIMENSIONS

MODEL No.	A	B	C	E	F	G	K	D	R
HD2B-10	10	7	3	8	1		17		
HD2B-12	12	9	5	10	1		21		
HD2B-14	14	11	7	12	1		25		
HD2B-16	16	12	9	14	1		28		
HD2B-18	18	13	11	16	2		31		
HD2B-20	20	15	13	18	2		35	3	5.5
HD2B-22	22	16	15	20	3		38	5	5.5
HD2B-24	24	17	17	22	3	*	41	7	5.5
HD2B-26	26	19	19	24	4	*	45	9	5.5
HD2B-28	28	20	21	26	4	*	48	11	5.5
HD2B-30	30	22	23	28	5	*	52	13	5.5

* Optional Hole upon Request

Choice of Positive Locking in both directions in extended position or Stop - Out Only which enables easy entry of Chassis into Cabinet without manipulations of Catches.

When Ordering, please specify Feature needed:
HD2B-20-SO (stop-out only).
HD2B-20-PL (positive locking).
HD2B FD (fast disconnect).
HD2B M (military models).